Horizontal Potting Box (H-RG) for pcb mounting

The potting boxes are made in gfr Polyphenylene Sulfide PPS of type torA504 (RTI long-range temperature +130 °C). Pin material: tin bronze, tinned. Maximum solder temperature 350 °C, 2 sec. Special materials – e.g. irradiated cross-linked – and designs on request, dimensions in mm/inch.

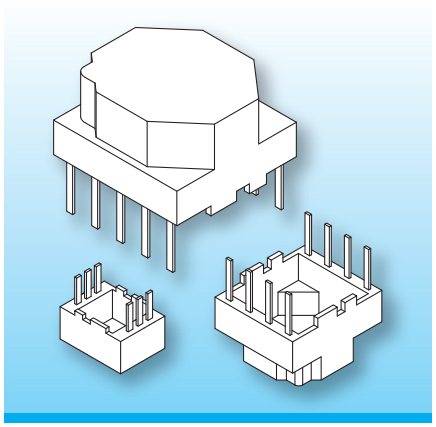

Boxes for pcbs, suitable for filter chokes or ISDN components. Depending on the box-type the solder pins have a cross-section of 0.6 x 0.25 mm (0.023 x 0.010 inch) and 0.6 x 0.4 mm (0.023 x 0.016 inch). The design features “stand offs” to the pcb to eliminate cold soldering, or can be used as positioning aid.

Type	Order-Code
Potting Box: H-RG 11.5/11.5/9.1/10f625-/torA504	66373-132
Solder-pin: f625-70/ub	75870-213

Accessories

on request

wound toroidal core

diameter Ø 11.5/Ø 0.453
width 7.6/0.299

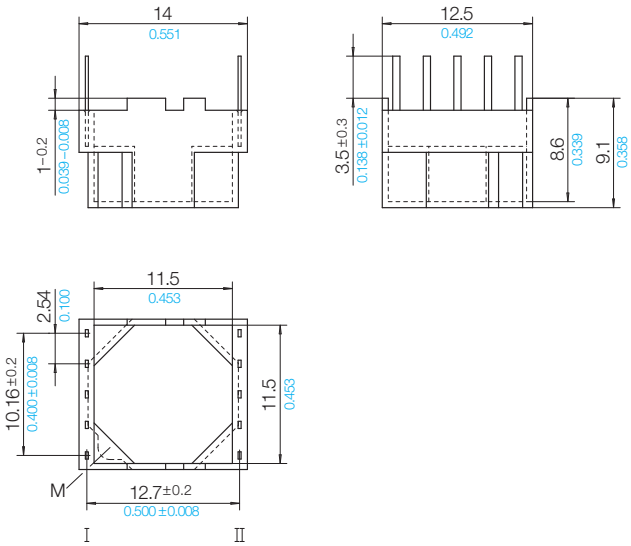

Grid
View pin-side

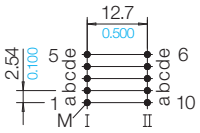

Stand 03/2014 | © 2026 NORWE ONE GmbH

Warranties:
refer to Terms and Conditions of Sale

Valid version of data sheet online

QR Online-Version

NORWE ONE GmbH
Postfach 13 56
51691 Bergneustadt
Paulstraße 5, Pernze
51702 Bergneustadt
Deutschland

Telefon +49 (0) 27 63-807-0
WhatsApp +49 2763 807-0
E-mail verkauf@norwe.de
Internet www.norwe.de
www.norwe.eu

NORWE Inc.
P.O. Box 25 11
North Canton, OH 44720-0511
United States of America

Telefon +1-330 497-8113
E-mail usa@norwe.com
Internet www.norwe.com